VERVE TRACK BRACKET MEASUREMENTS - Visible Fixing

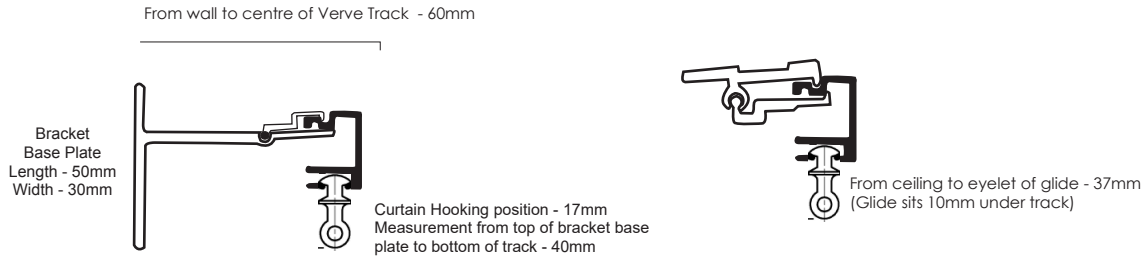

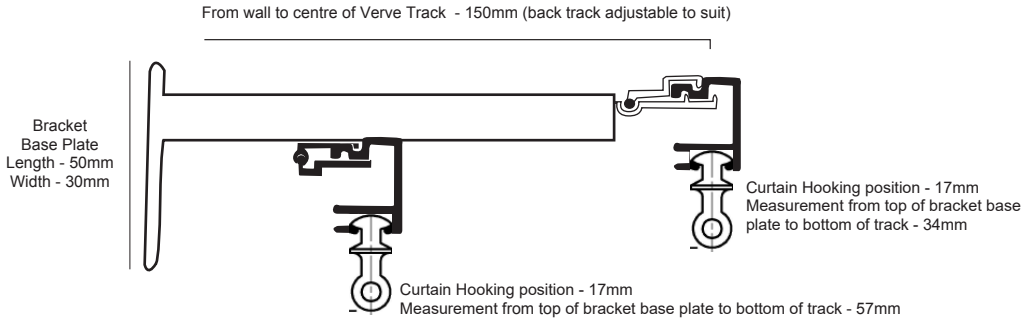

Front rod sits 23mm higher than rear track

Verve Double Bracket
Verve Front / Verve Back

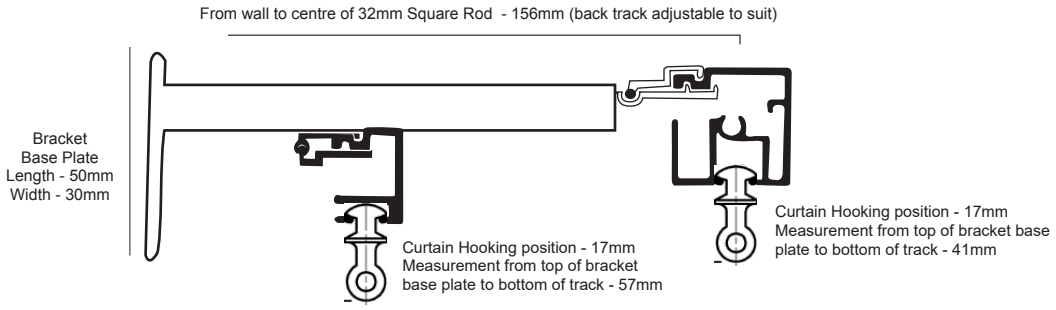

Front rod sits 16mm higher than rear track

32mm Square Rod Double Bracket
32mm Front / Verve Back

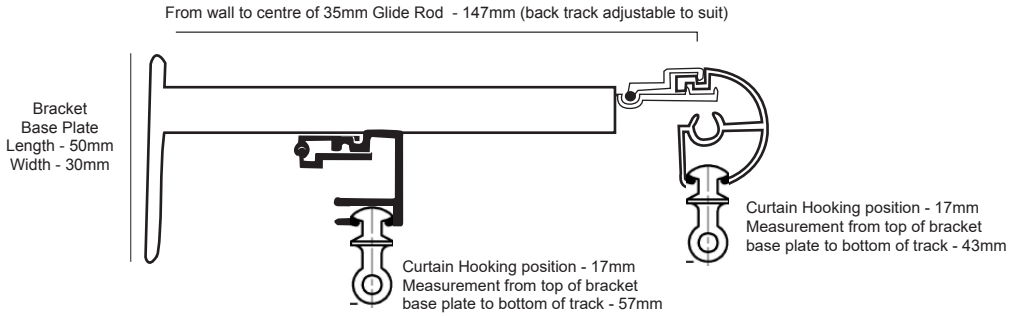

Front rod sits 14mm higher than rear track

35mm Glide Rod Double Bracket
35mm Front / Verve Back